Dimensions for Metropolitan

8’ 9 1/2" Minimum Ceiling Height

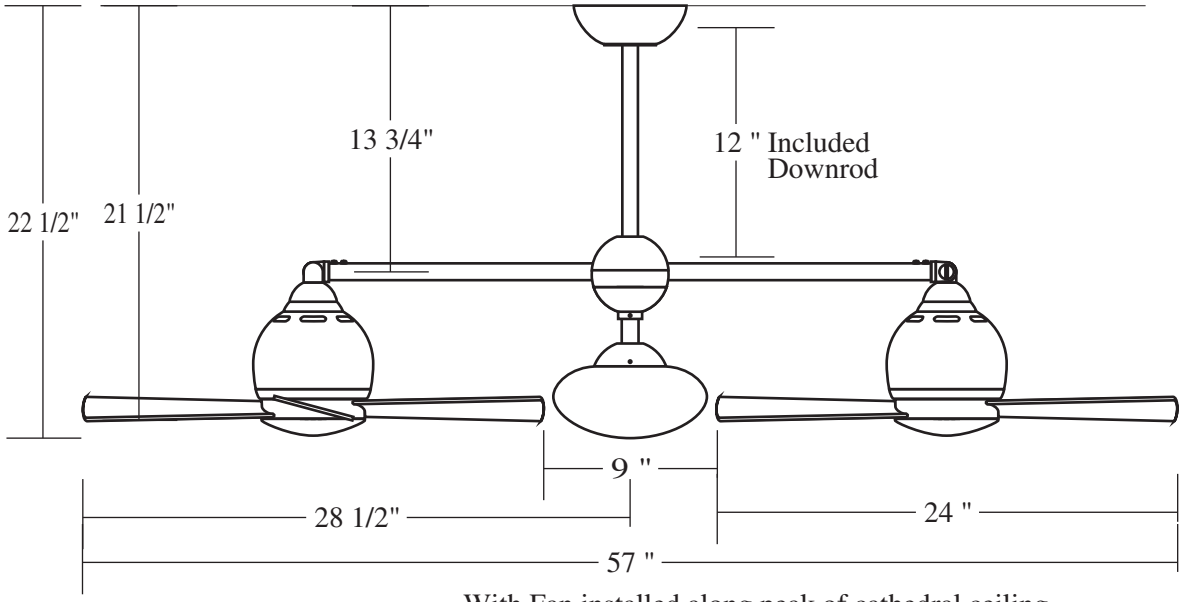

With Fan installed along peak of cathedral ceiling...
For no Rise to 12:12* use included 12" downrod
(*Hanging Bracket limited to 8½:12)

With Fan installed across peak of cathedral ceiling...
For no Rise to 8½:12 use included 12" downrod

9’ 4" Minimum Ceiling Height

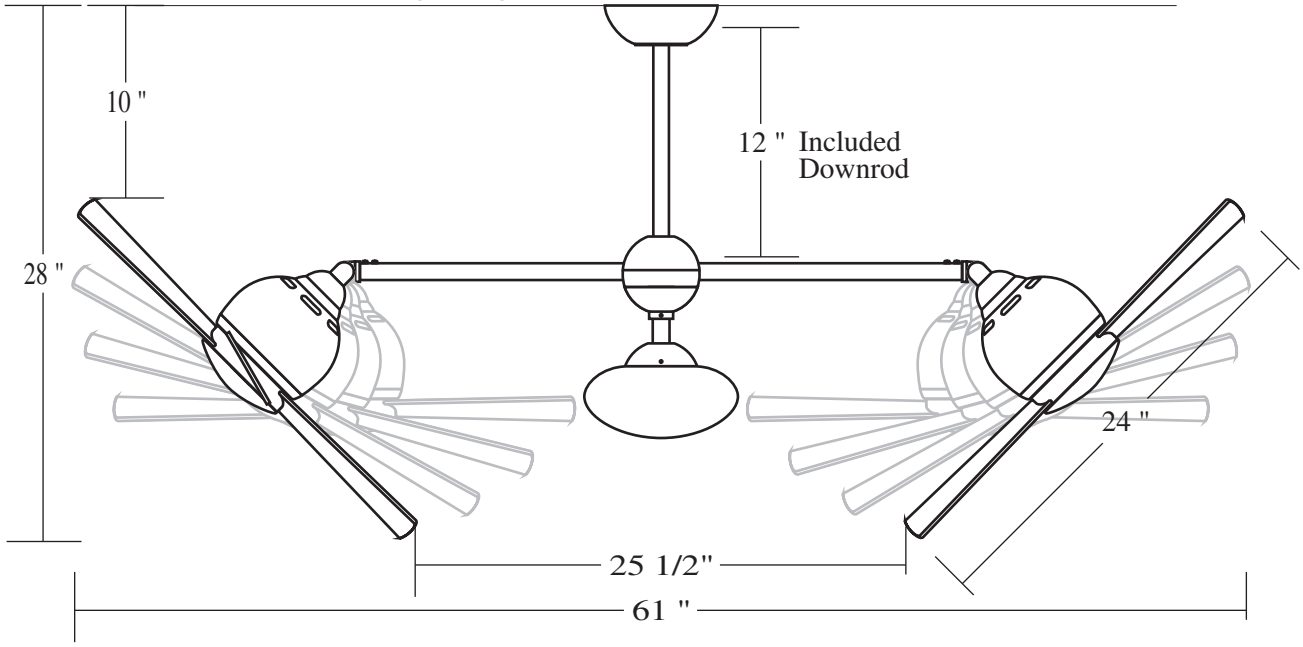

With Fan installed along peak of cathedral ceiling...
For no Rise to 12:12* use included 12" downrod
(*Hanging Bracket limited to 8½:12)

With Fan installed across peak of cathedral ceiling...
For no Rise to 4:12 use included 12" downrod
For a Rise of 4:12 to 6:12 use 18" downrod
For a Rise of 6:12 to 8½:12 use 24" downrod